CONTROLLED

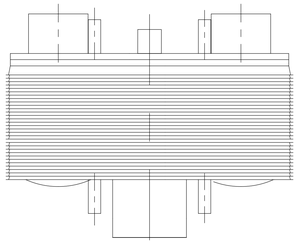

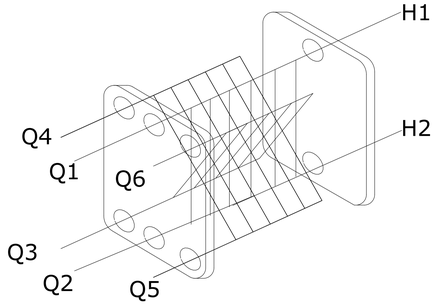

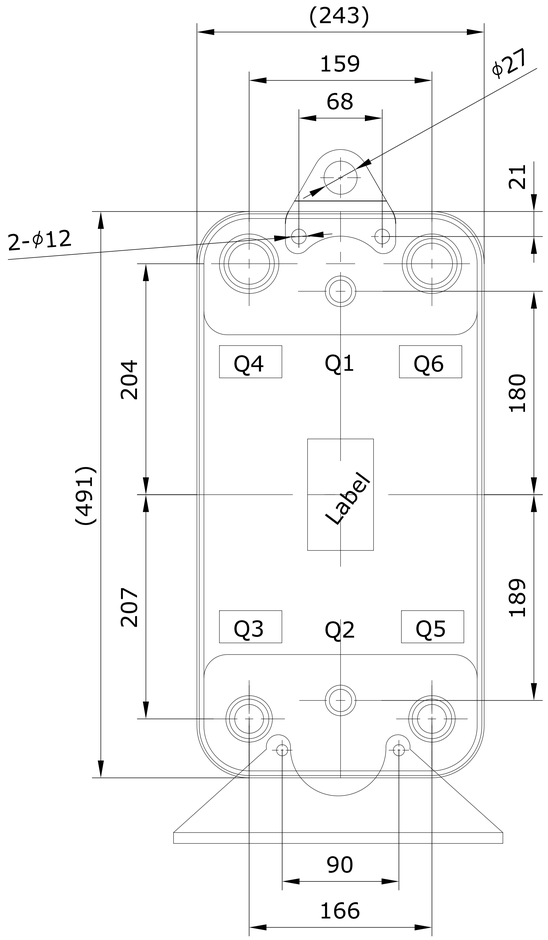

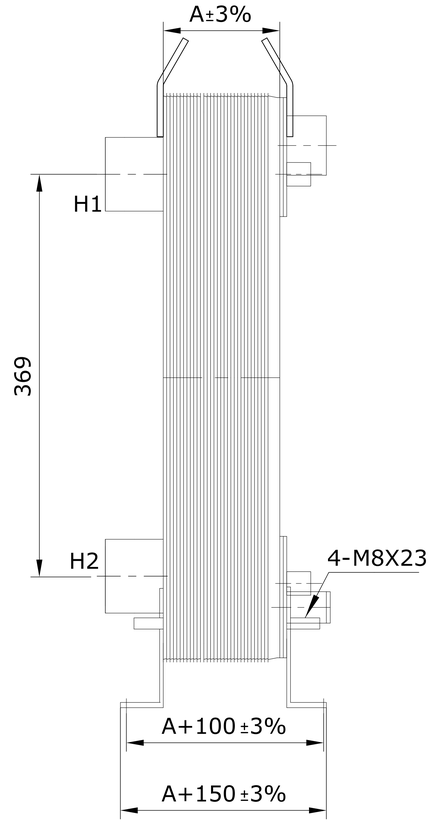

Q3-Q5
H7/8"(H2075)
Solder connection

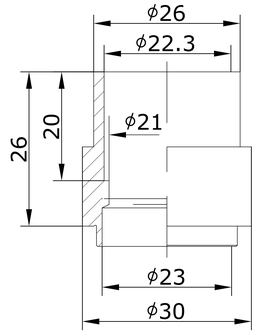

Q4-Q6
H1"1/8(H4114)
Solder connection

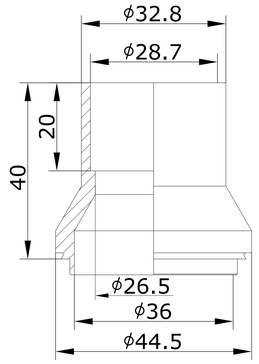

Q1-Q2
N1/2(N104)
Thread connection

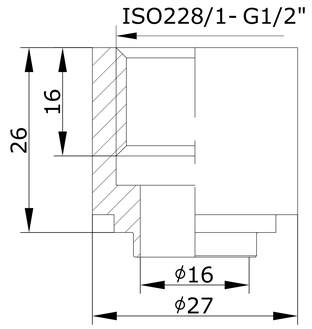

H1-H2
L2"(W520)
Thread connection

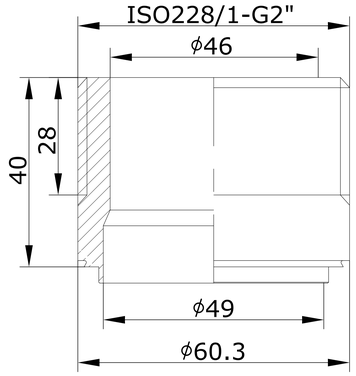

	DESIGN DATA
DESIGN PRESSURE	3.0MPa
TEST PRESSURE	4.5MPa
DESIGN TEMPERATURE	-196/+225
LEAKAGE TEST	Helium Test
WEIGHT	39Kg
VOLUMN	H1H2: 7.8L
	Q4Q5: 3.7L/Q3Q6: 3.7L
PLATE MATERIAL	316L
PIPE MATERIAL	304
FRAME MATERIAL	304

ID	RIDAN Code	Drawing No.	Model	Plates(n)	A
1	111B0387R	23020404	113W	78	168

Assembly drawing					
DEPARTMENT	Sales Department	DATE	SCALE	ридан®	
DESIGNER	JLN	2024/10/17		DESIGNATION: RD-113W-78-3,0-HDQ-Q1Q2(N1/2)/ Q3Q5(H7/8")/Q4Q6(H1"1/8)/ H1H2(L2")/4- M8*23	
INSPECTOR	ZJF				
APPROVAL			DRAWING NO.	23020404	REV 1